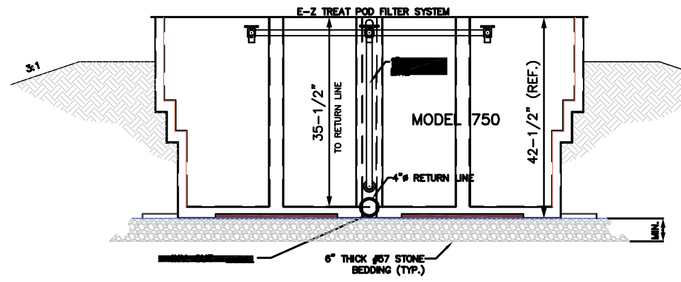

B D218 **SECTION 'B'**

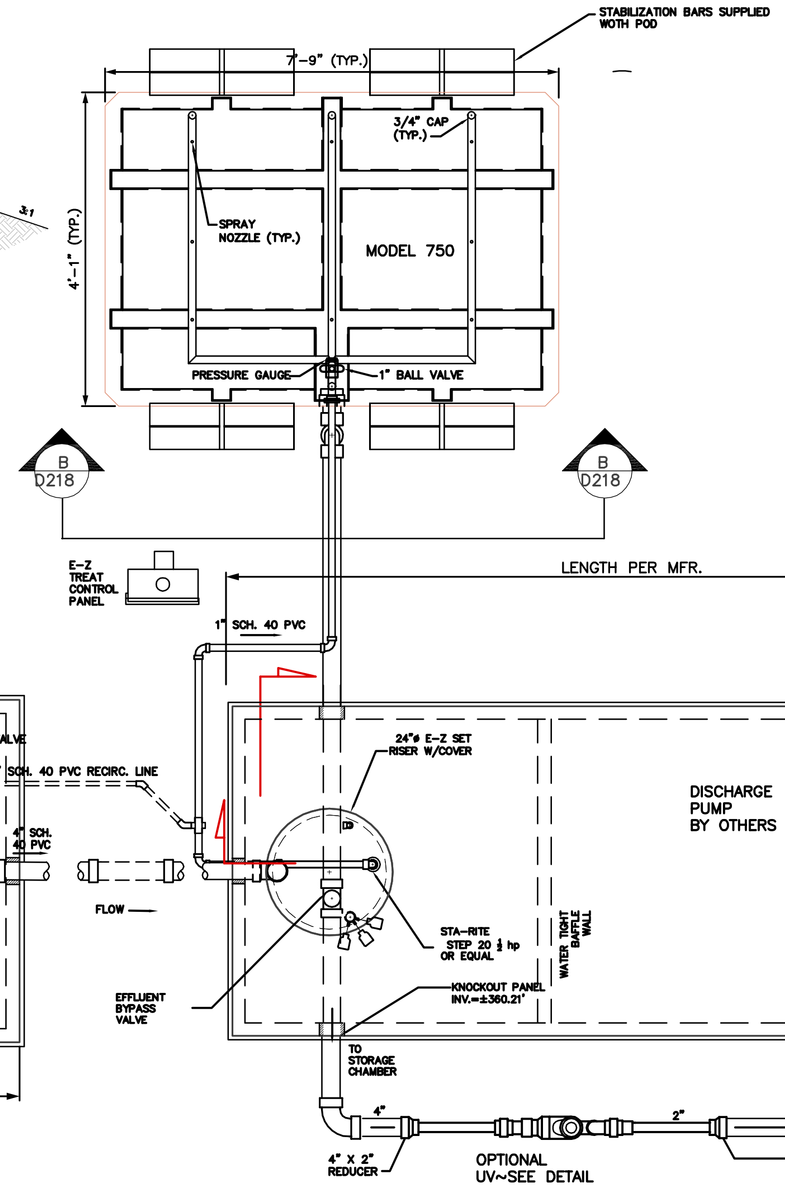

1 D218 **SEPTIC AND RECIRCULATION/STORAGE TANKS**
NTS

1 D218 **RECIRCULATION/FIELD DOSING TANKS**
NTS

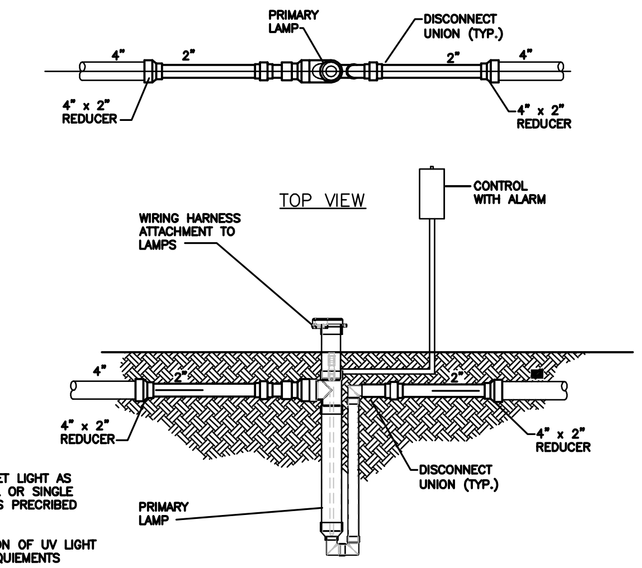

NOTES:

1. ULTRAVIOLET LIGHT AS NEEDED DUAL OR SINGLE BULB UNIT AS PRECRIBED IN DETAIL

2. ORIENTATION OF UV LIGHT PER SITE REQUIEMENTS

E D218 **ULTRAVIOLET DISINFECTION UNIT**
NTS

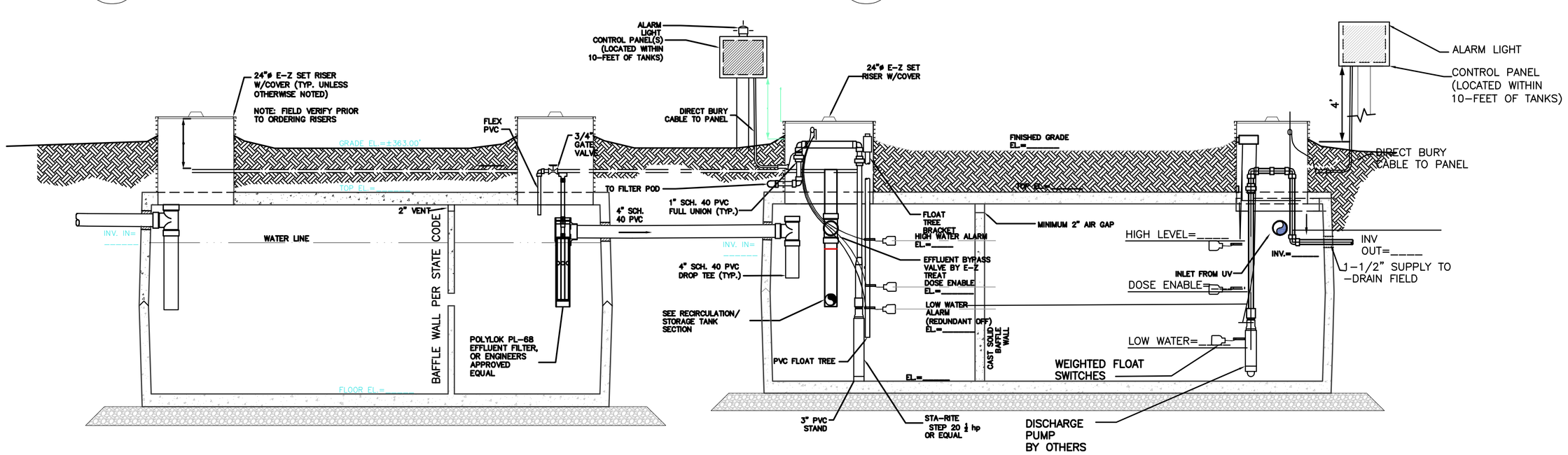

D D218 **SEPTIC AND RECIRCULATION/STORAGE TANK SECTIONS**
NTS

NOTIFY UNDERGROUND UTILITIES LOCATOR PRIOR TO ANY EXCAVATION. CONTRACTOR IS RESPONSIBLE FOR COORDINATION OF ALL TRADES AND SUBCONTRACTORS. CONTRACTOR IS RESPONSIBLE FOR FIELD VERIFYING ALL DIMENSIONS, ELEVATIONS, AND LOCATION OF ALL EXISTING CONDITIONS AND UTILITIES.

GENERAL NOTES:

1. ALL PIPING SHALL BE SCH 40 PVC UNLESS OTHERWISE NOTED ON PLANS. ALL PVC PIPES SHALL BE BURIED A MINIMUM OF 18" UNLESS SHOWN OTHERWISE.
2. CONTRACTOR SHALL COMPLY WITH ALL APPLICABLE SOIL EROSION AND SEDIMENTATION CONTROL REQUIREMENTS.
3. CONTRACTOR SHALL COMPLY WITH ALL APPLICABLE OSHA, aND OTHER RELATED SAFETY REQUIREMENTS.
4. CONTRACTOR SHALL COMPLY WITH ALL APPLICABLE FEDERAL, STATE, COUNTY, AND LOCAL REGULATIONS. IN EVENT OF DISCREPANCY CUNSULT MANUFACRURER AND ENGINEER OF RECORD. FAILURE TO DO DO VOIDS LIABILITY OF EZ-TREAT INC. AND ENGINEER OF RECORD.
5. SYSTEM DESIGN SHALL BE PERMITTED BY APPICABLE AUTHORITIES PRIOR TO INSTALLATION.
6. CONTRACTOR SHALL BE RESPONSIBLE FOR REPAIRING ALL CONSTRUCTION DAMAGE EXPEDITIOUSLY AND AT NO ADDITIONAL COST TO THE OWNER.
7. ALL TANKS SHALL HAVE A MINIMUM 28-DAY CONCRETE STRENGTH OF 4500 PSI.
8. TANKS SHALL MEET REINFORCING REQUIREMENTS TO ACCOMMODATE 300 POUNDS PER SQUARE FOOT. EITHER STEEL REINFORCING WIRE, REBAR OR APPROVED FIBER MAY BE USED.
9. ALL TANKS AND EFFLUENT FILTERS SHALL BE APPROVED BY E-Z TREAT AND ON-SITE WASTEWATER. EFFLUENT FILTERS SHALL BE SIZED FOR DESIGN FLOW AND EXTEND DOWN TO 50-PERCENT OF LIQUID LEVEL.
10. ALL JOINTS (MID-SEAM, TOP-SEAM) SHALL BE SEALED USING CONCRETE SEALANTS BUTYL SEALANT # CS-118 OR EQUAL.
11. TANKS SHALL BE LEAK-TESTED PRIOR TO SYSTEM START UP IN ACCORDANCE WITH ASTM STANDARDS AND AS REQUIRED BY LOCAL REGULATORY AUTHORITY
12. ALL PIPE PENETRATIONS THROUGH PRECAST CONCRETE TANKS SHALL BE PRESS-SEAL CAST-A-SEAL 402 RUBBER BOOTS OR EQUAL.
13. THE FILTER POD INVERT OUT SHALL BE 1/4-INCH PER FOOT SLOPE MINIMUM
14. ALL TANKS MUST MEET STATE OR LOCAL CODES.
15. U.V. SHALL BE INSTALLED AS REQUIRED BY LOCAL AND STATE CODE

PROJECT

CITY

COUNTY

ADDRESS

P.O. BOX 176
HAYMARKET, VA 20168
PH. 703.763.4770
web: eztreat.net

DESIGN		
DRAWN		
APPROVED		

ENGINEER

SYSTEM CONFIGURATION

E-Z TREAT SYSTEM SINGLE MODEL 750 POD, TWO TANK SIMPLEX DESIGN

SEP. RECIRC. AND DOSE TANKS PLAN AND SECTIONS

SHEET 1 OF 1

DWG NO. D218